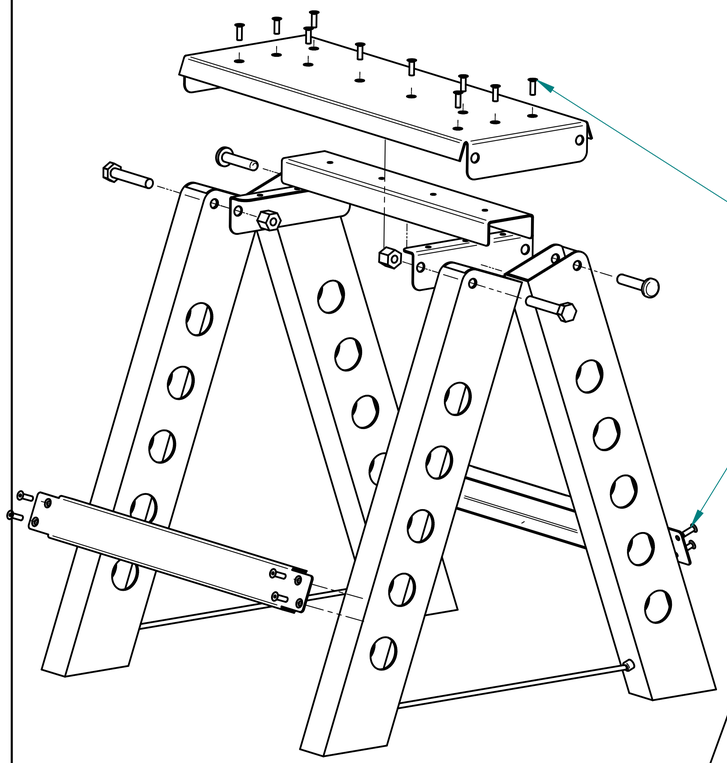

Aluminum 1/8-0.250 grip flush Pop rivets

Steel 1/8-0.250 grip dome head Pop rivets

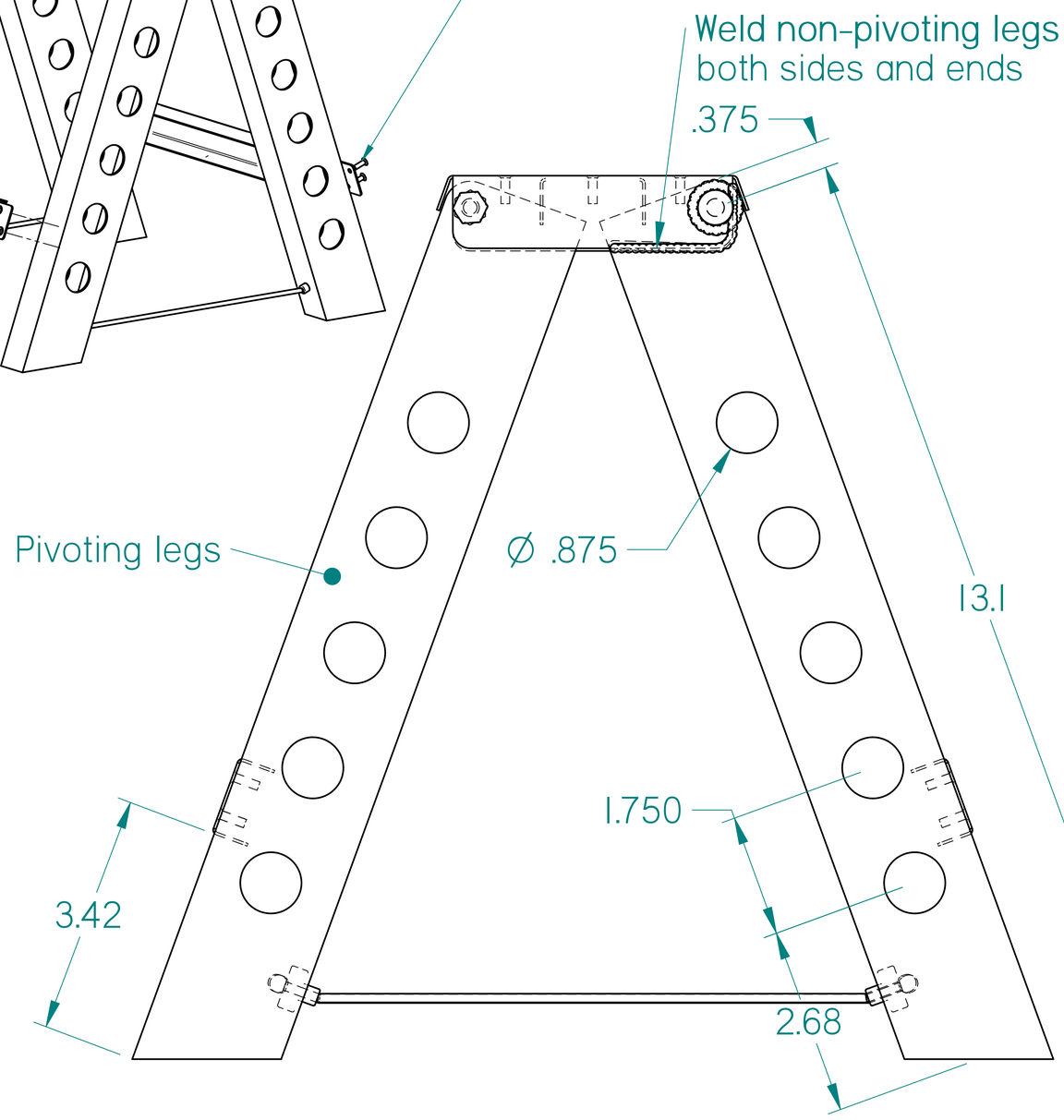

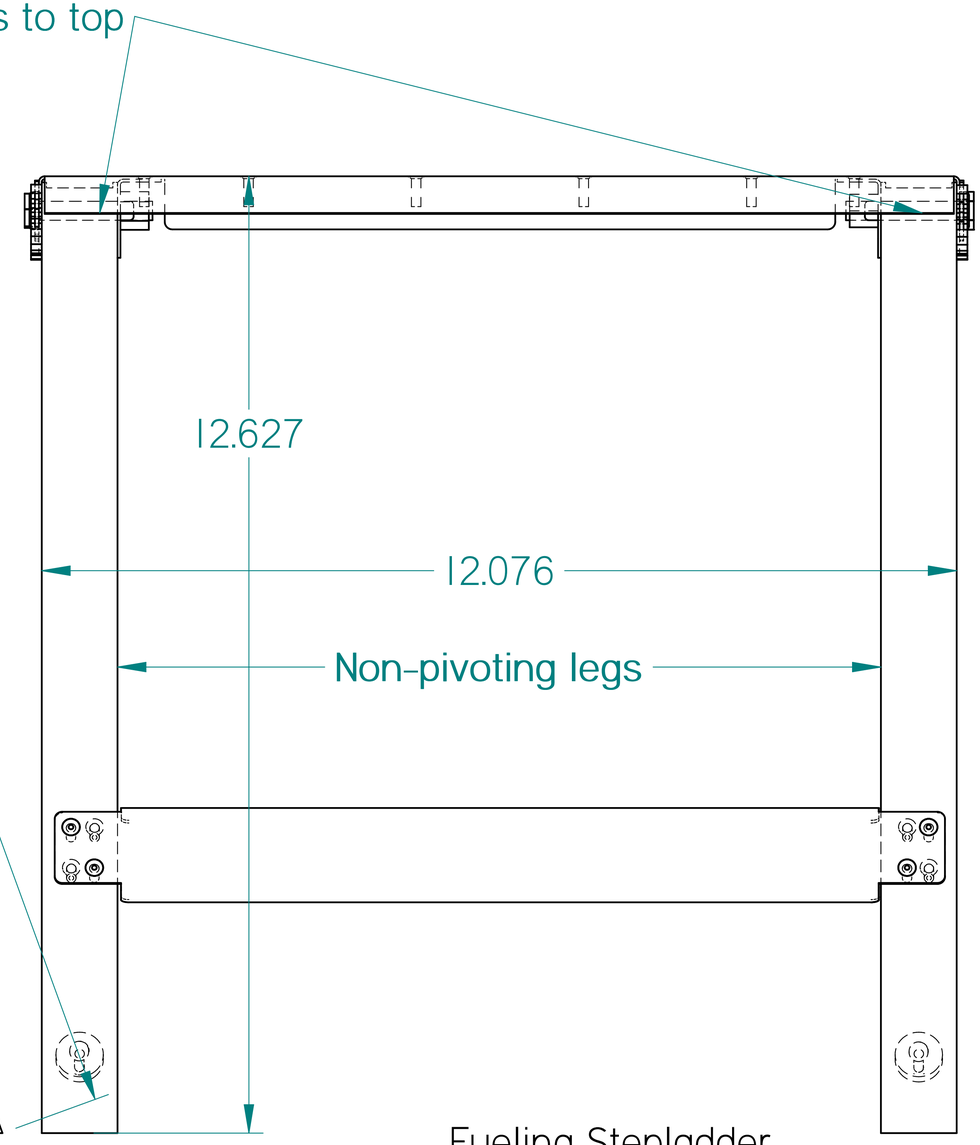

Fueling Stepladder

Page 1 of 2 HSM July 2020

KITPLANES

Flat pattern for top

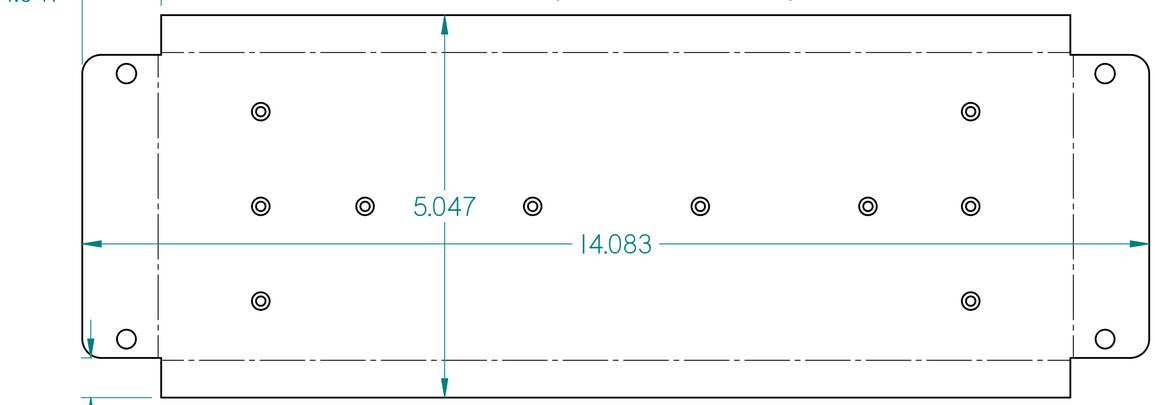

Material .073 Aluminum diamond treat sheet

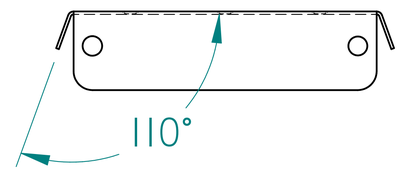

Flat pattern for top reinforcing channel

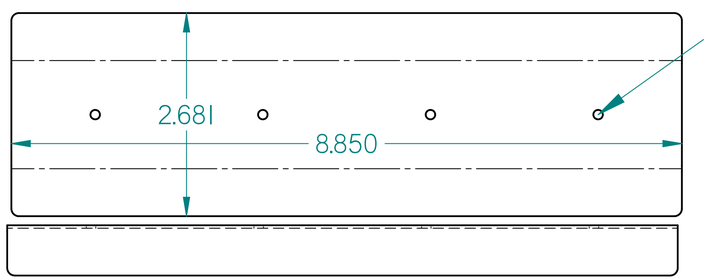

Clamp to top and drill rivet holes together at fit-up.

Material 0.040 6061 AL sheet

Angle bracket inboard support for legs

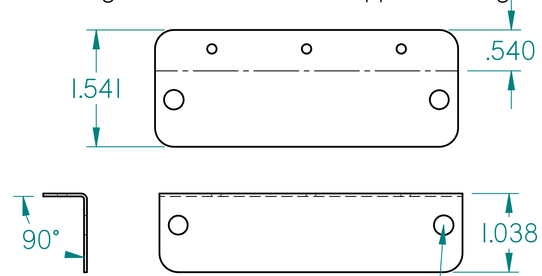

Material 0.040 6061 AL sheet

DRILL holes at fit-up with legs and top

Flat pattern for long brace for legs

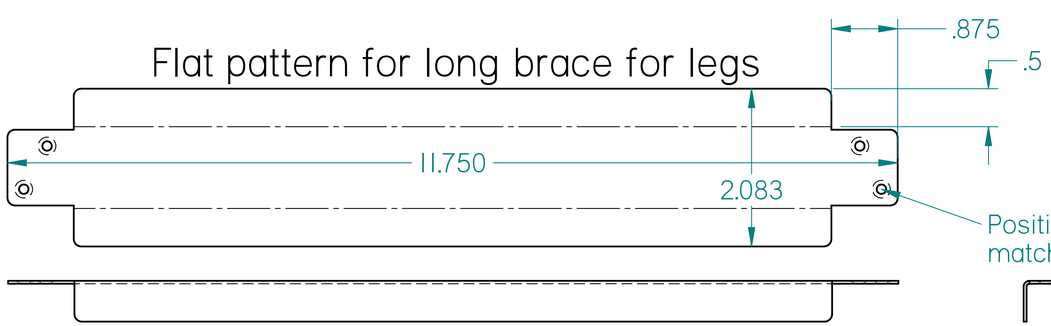

Position on legs and match drill for riveting

Material 0.040 6061 sheet

Alignment pin for non-pivoting welded legs

6061 AL

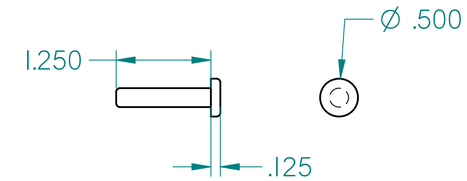

Threaded bolt for pivoting legs, lath- turned, die-threaded mill flats with indexer

6061 AL

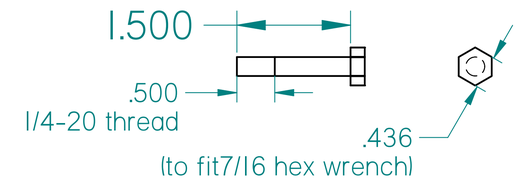

Nut, drill and tap $\frac{1}{4}$ 20 thread, mill flats with indexer

6061 AL

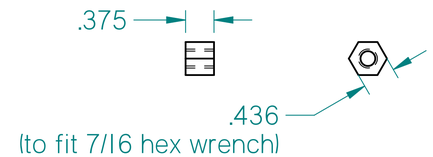

Bushing for rope guy line

Nylon

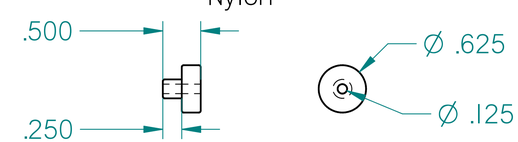

Fueling Stepladder

KITPLANES